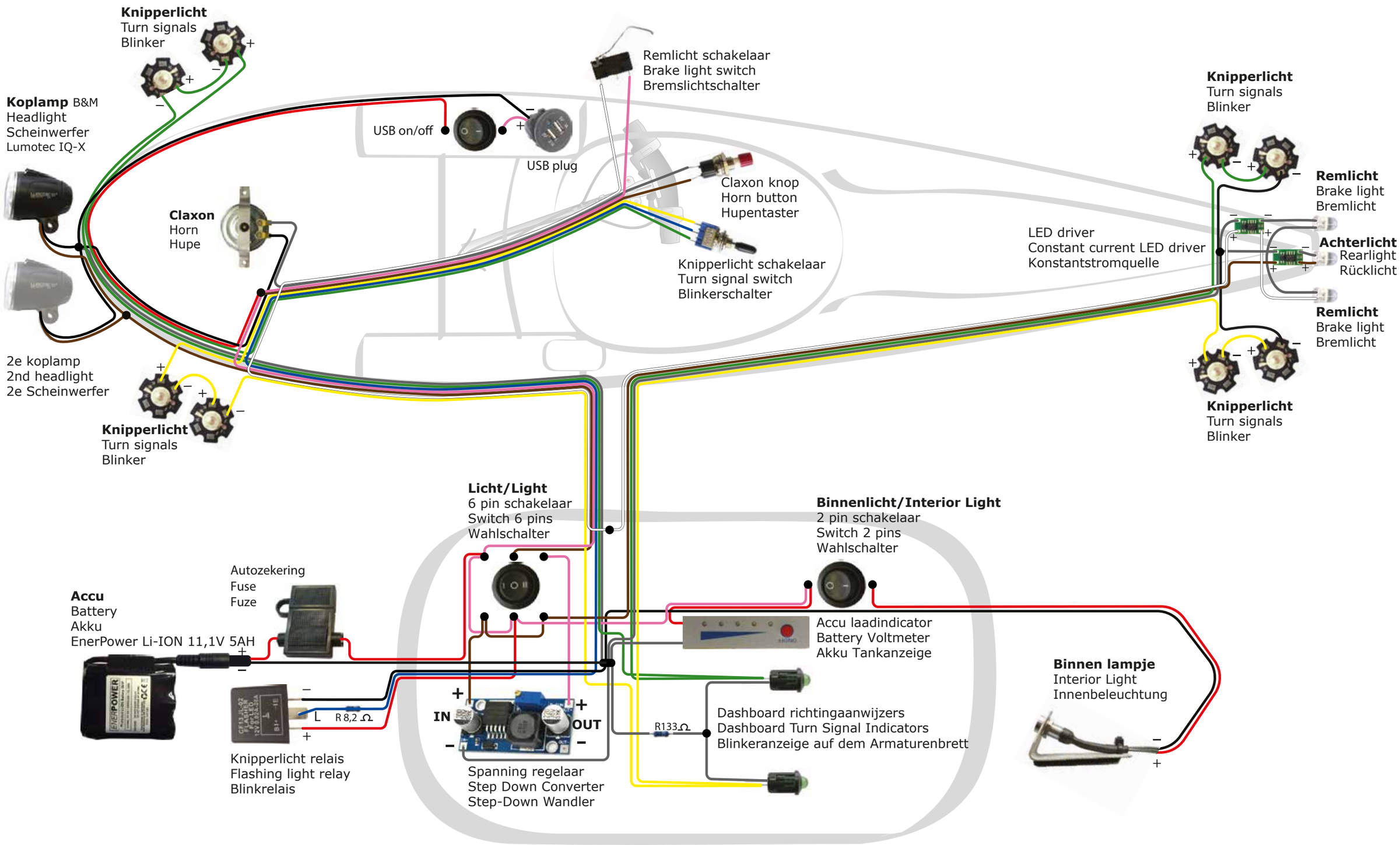Quest, Strada and Quest XS wiring diagram 12V - 2022